Roller bearing
NNF5004-PP-V-2NR-ZEN - NNF5004-PP-V-2NR-ZEN

https://www.123bearing.eu/bearing-housing/roller-bearing/roller/nnf5004-pp-v-2nr-zen

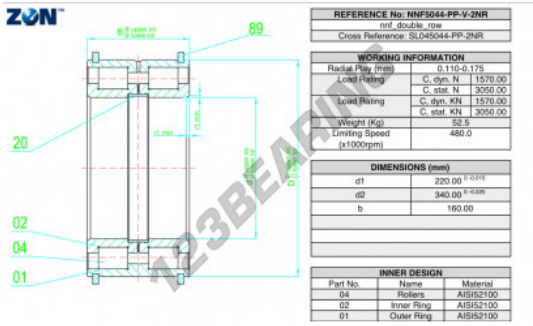

PRODUCT FEATURES

Brand	ZEN
N° Ean13	3616060510969
Inside diameter	20 mm
Outside diameter	42 mm
Thickness	30 mm
Packaging	1

contact@123bearing.eu
+33 359 36 04 90
CRT4 de Lesquin 60 Rue Du Haut De Sainghin 59273 Fretin FRANCE